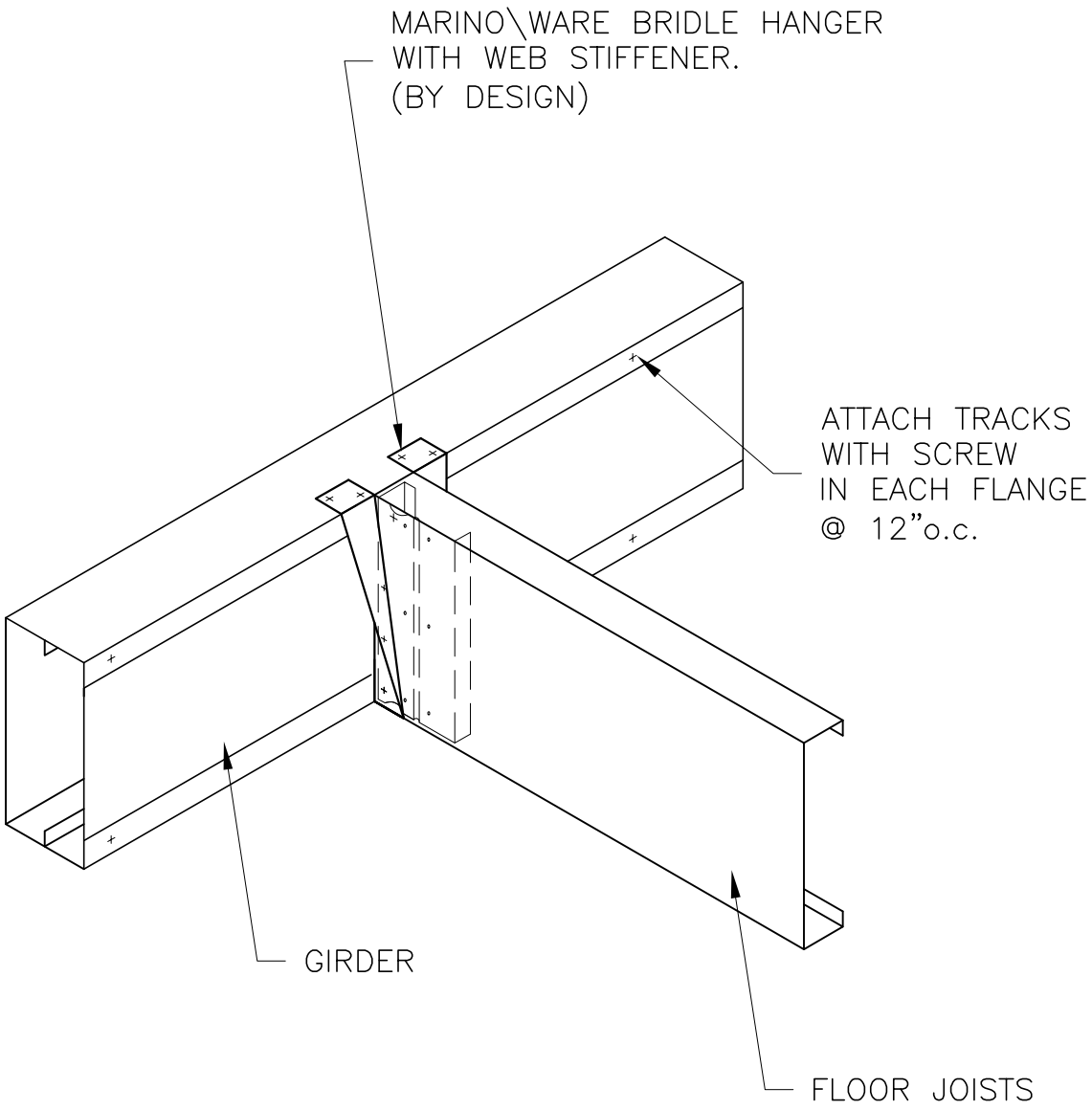

SINGLE JOIST TO GIRDER WITH
MARINO\WARE HANGER

Marino\WARE J32 - JOIST CONNECTION