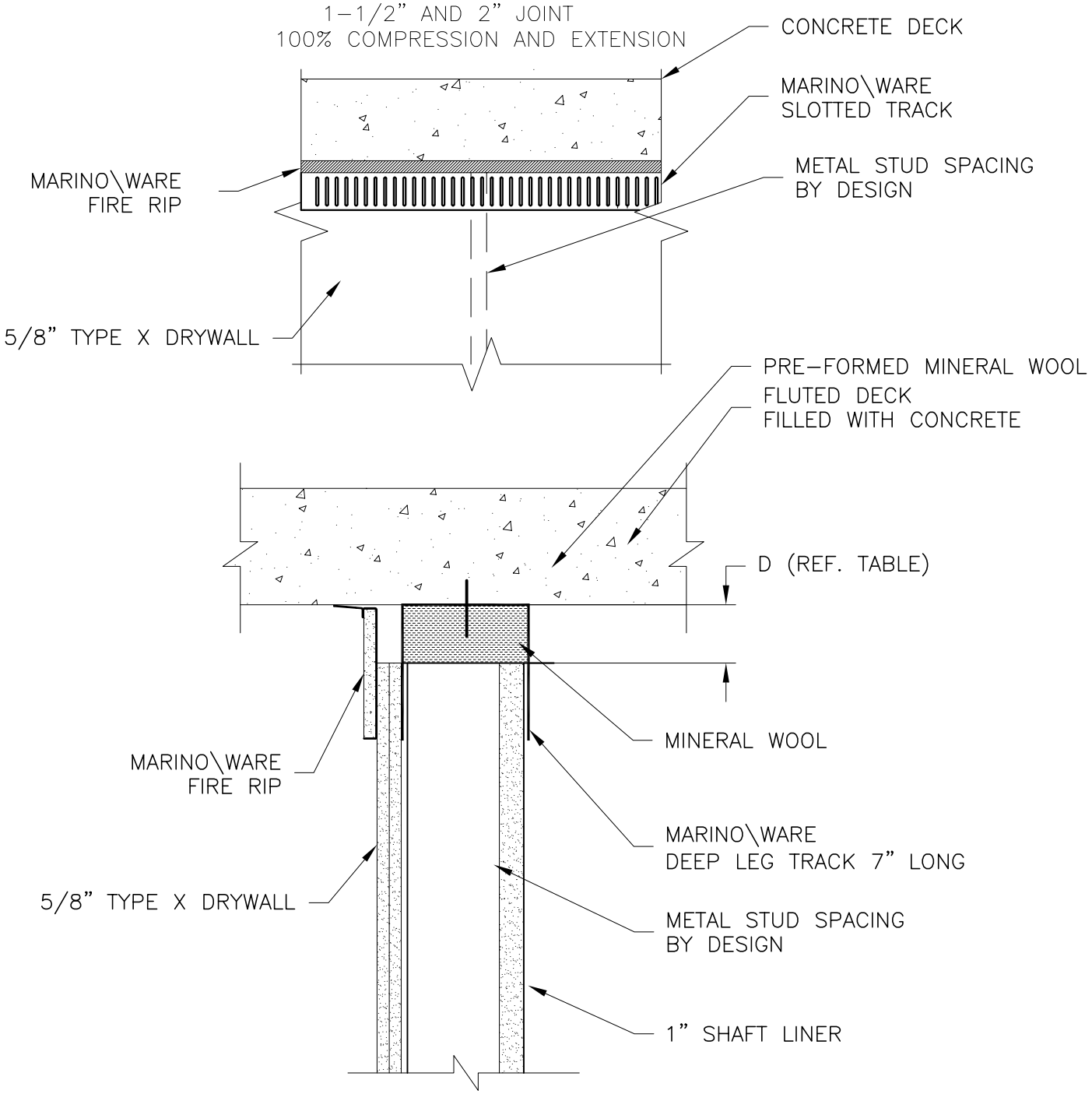

(D)
FR2 = 2" TOTAL MOVEMENT

HW-D-0585 SHAFT-WALL AT CONCRETE

NOTES:
1.) SINGLE LAYER OF 5/8" TYPE X DRYWALL FOR 1 HOUR AND 2 LAYERS FOR 2 HOURS.
2.) ALWAYS CHECK UL FIRE RESISTANCE DIRECTORY FOR COMPLETE DESIGN REQUIREMENTS.